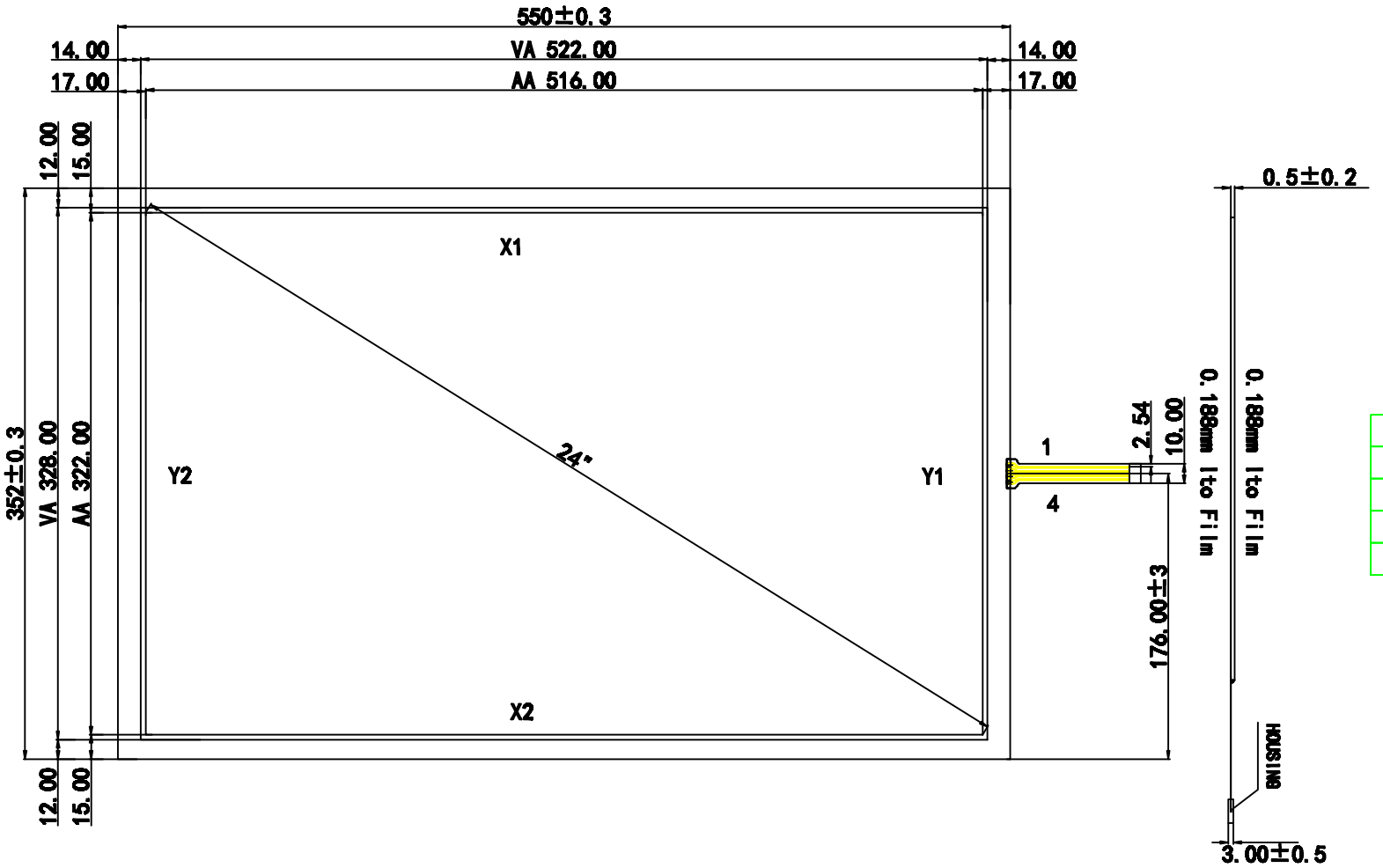

PIN	OUT
1	X1
2	Y1
3	X2
4	Y2

Notes:

1. Type:Film to Film
2. Operating Voltage:≤10V
3. Operation Temperature:-10℃～60℃ Storage Temperature:-20℃～70℃
4. Life Time: >1, 000, 000 times
5. Connect Material:FPC
6. Response Time:≤10ms
7. Linearity:≤1.5%
8. Transmittance:≥85%
9. Surface Hardness≥3H(pencil)
10. Operation force: 60g～150g
11. Resistance:X:200Ω-1000Ω Y:100Ω-600Ω

MODEL NO.	TS240A4K01	UNIT:	MM
DRAWN:		TOLERANCE:	±0.3
DATE:	11/8/25	SCALE:	1:1
VERSION:	1.0	REV:	